fast freight

## DRY Containers

| Size feet / inches | Door openings* mm feet / inches | | Internal dimensions* mm feet / inches | | | Weight* kg lb | | | Volume* m3 cubic feet |
|---|---|---|---|---|---|---|---|---|---|
| | Width | Height | Length | Width | Height | Max. gross | Tare | Max. payload | |
| 20 standard 20′ x 8′ x 8′6″ | 2,339<br>7' 8 1/16" | 2,274<br>7' 5 1/2" | 5,896<br>19' 4 1/8" | 2,350<br>7' 8 1/2" | 2,393<br>7' 10 3/16" | 30,480<br>67,200 | 2,280<br>5,030 | 28,200<br>62,170 | 33<br>1,165 |
| 40 standard 40′ x 8′ x 8′6″ | 2,340<br>7' 8 1/8" | 2,274<br>7' 5 1/2" | 12,032<br>39' 5 11/16" | 2,350<br>7' 8 1/2" | 2,393<br>7' 10 3/16" | 32,500<br>71,650 | 3,700<br>8,157 | 28,800<br>63,493 | 67<br>2,366 |
| 40 high cube 40′ x 8′ x 9′6″ | 2,340<br>7' 8 1/8" | 2,577<br>8' 5 7/16" | 12,032<br>39' 5 11/16" | 2,350<br>7' 8 1/2" | 2,697<br>8' 10 1/8" | 32,500<br>71,650 | 3,880<br>8,554 | 28,620<br>63,100 | 76<br>2,684 |
| 45 high cube 45′ x 8′ x 9′6″ | 2,340<br>7' 8 1" | 2,585<br>8' 5 12" | 13,556<br>44' 5 11" | 2,352<br>7' 8 9 | 2,698<br>8' 10 3" | 32,500<br>71,650 | 4,900<br>10,803 | 27,600<br>60,848 | 85<br>3,036 |

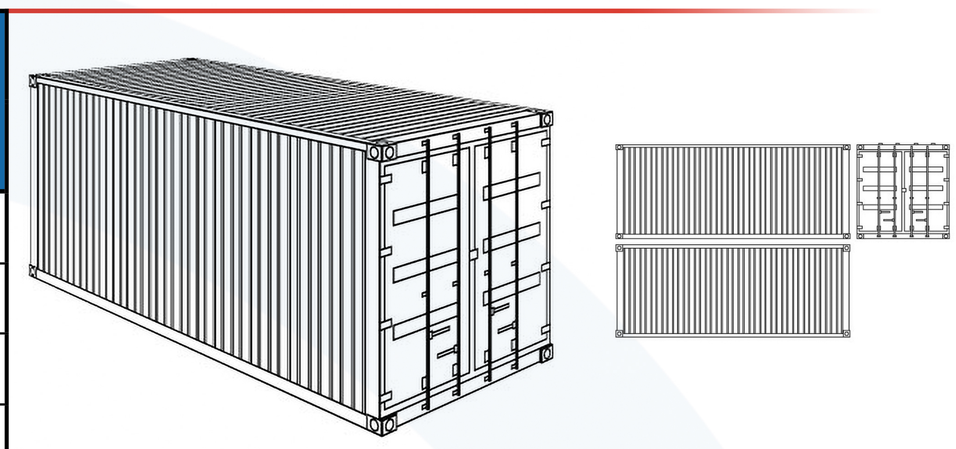

## REEFER Containers

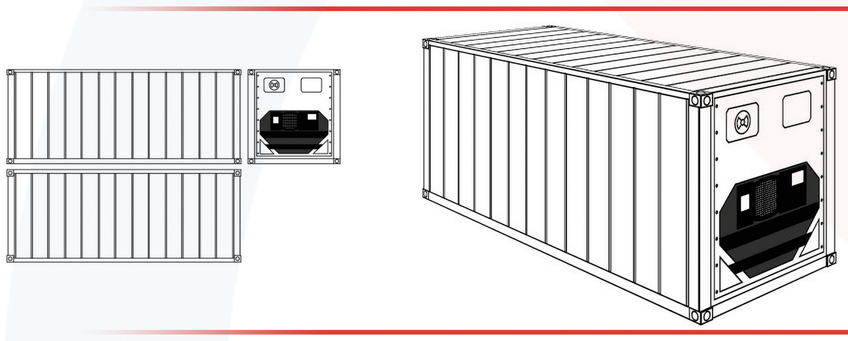

| Size feet / inches | Door openings* mm feet / inches | | Internal dimensions* mm feet / inches | | | Weight* kg lb | | | Volume* m3 cubic feet |
|---|---|---|---|---|---|---|---|---|---|
| | Width | Height | Length | Width | Height | Max. gross | Tare | Max. payload | |
| 20 standard 20′ x 8′ x 8′6″ | 2,290<br>7' 6 1/8" | 2,212<br>7' 3 1/16" | 5,451<br>17' 10 9/16" | 2,290<br>7' 6 1/8" | 2,167<br>7' 1 5/16" | 30,480<br>67,200 | 2,990<br>6,591 | 27,490<br>60,600 | 27<br>953 |
| 40 high cube 40′ x 8′ x 9′6″ | 2,276<br>7' 5 9/16" | 2,471<br>8' 1 1/14" | 11,580<br>37' 11 7/8" | 2,275<br>7' 11 1/6" | 2,415<br>7' 11 1/6" | 34,000<br>74,957 | 4,520<br>9,965 | 29,480<br>64,992 | 67.5<br>2,384 |

## FLAT RACK Containers

| Size feet / inches | Internal dimensions* mm feet / inches | | | Length between* mm feet / inches | | Max width* mm feet /inches | Weight* kg lb | | |
|---|---|---|---|---|---|---|---|---|---|
| | Length | Width | Height | Headers | Corner posts angle | | Max. gross | Tare | Max. payload |
| 40 fixed corner FR 40′ x 8′ x 8′6″ | 12,192<br>40' | 2,438<br>8' | 1,940<br>6' 4 3/8" | 12,080<br>39' 7 9/16" | 11,796<br>38' 8 3/8" | 2,114<br>6' 11 3/16" | 40,000<br>88,183 | 5,500<br>12,125 | 34,500<br>76,058 |
| 40 flush fold FR 40′ x 8′ x 8′6″ | 12,192<br>40' | 2,438<br>8' | 1,940<br>6' 4 3/8" | 12,058<br>39' 6 11/16" | 11,662<br>38' 3 1/8" | 2,224<br>7' 3 1/2" | 40,000<br>88,183 | 5,500<br>12,125 | 34,500<br>76,058 |
| 40 high 40′ x 8′ x 9′6″ | 12,192<br>40 | 2,438<br>8' | 2,260<br>7' 4 29/30" | 12,058<br>39' 6 11/16" | 11,662<br>38' 3 1/8" | 2,224<br>7' 3 1/2" | 52,500<br>111,741 | 5,300<br>11,684 | 47,200<br>104,056 |

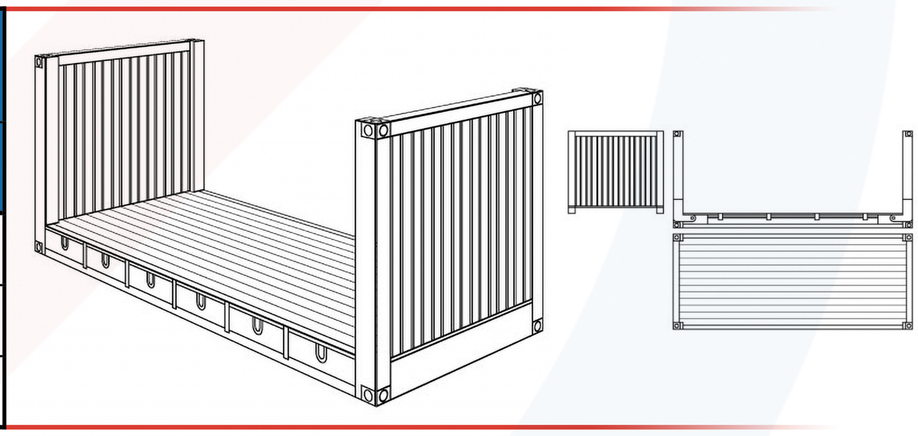

## OPEN TOP Containers

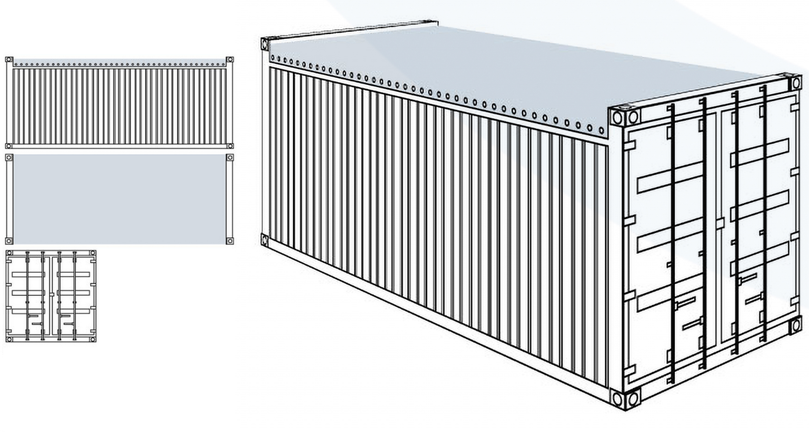

| Size feet / inches | Internal dimensions* mm feet / inches | | | Door openings* mm feet / inches | | Top opening* mm feet / inches | | Weight* kg lb | | |
|---|---|---|---|---|---|---|---|---|---|---|
| | Length | Width | Height | Width | Height | Length | Width | Max. gross | Tare | Max. payload |
| 20 open top 20′ x 8′ x 8′6 | 5,919<br>19' 5" | 2,346<br>7' 8 5/16" | 2,286<br>7' 6" | 2,286<br>7'6" | 2,253<br>7' 4 11/16" | 5,490<br>18' 1/16" | 2,223<br>7' 3 1/2" | 30,480<br>67,196 | 2,280<br>5,027 | 28,000<br>61,728 |
| 40 open top 40′ x 8′ x 8′6″ | 12,192<br>40' | 2,338<br>7' 8" | 2,289<br>7' 6 1/16" | 2,289<br>7' 6 1/16" | 2,253<br>7' 4 11/16" | 11,810<br>38' 8 25/26" | 2,223<br>7' 3 1/2" | 32,700<br>72,090 | 4,000<br>8,818 | 28,700<br>63,272 |
| 40 open top hc 40′ x 8′ x 9′6″ | 12,192<br>40' | 2,348<br>7' 8 3/8" | 2,653<br>8' 8 4/9" | 2,388<br>7' 8" | 2,580<br>8' 5 9/12" | 11,810<br>38' 8 25/26" | 2,223<br>7' 3 1/2" | 30,480<br>67,196 | 4,000<br>8,818 | 26,480<br>58,377 |